SIEMENS

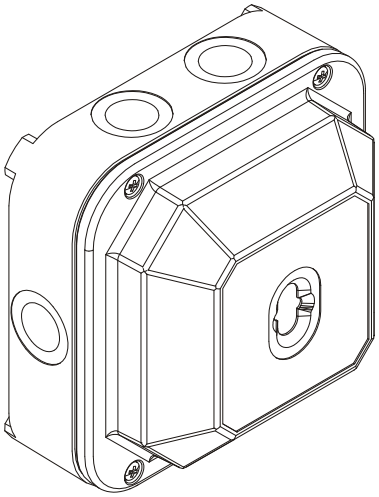

# FDF221-9, FDF241-9

# Flame detector

## Technical manual

Building Technologies

Fire Safety & Security Products

# Table of contents

# 1 About this document

## Goal and purpose

This document contains all necessary information on the flame detectors FDF221-9 and FDF241-9. The consistent observance of the instructions ensures a trouble-free and safe application.

## Target groups

The information in this document is intended for the following target groups:

| Target group | Activity | Qualification |
|---|---|---|
| Product Manager | ● Is responsible for information passing between the manufacturer and regional company.<br>● Coordinates the flow of information between the individual groups of people involved in a project. | ● Has obtained suitable specialist training for the function and for the products.<br>● Has attended the training courses for Product Managers. |
| Project Manager | ● Coordinates the deployment of all persons and resources involved in the project according to the schedule.<br>● Provides the information required to run the project. | ● Has obtained suitable specialist training for the function and for the products.<br>● Has attended the training courses for Project Managers. |
| Project Engineer | ● Parameterizes the product according to country-specific and customer-specific requirements.<br>● Checks operability and releases the product for commissioning at the place of installation.<br>● Searches for and corrects malfunctions. | ● Has obtained suitable specialist training for the function and for the products.<br>● Has attended the training courses for Project Engineers. |
| Installation personnel | ● Assembles and installs the product components at the place of installation.<br>● Carries out a performance check following installation. | ● Has received specialist training in the area of building installation technology or electrical installations. |
| Commissioning personnel | ● Configures the product at the place of installation according to customer-specific requirements.<br>● Checks the product operability and releases the product for use by the operator.<br>● Searches for and corrects malfunctions. | ● Has obtained suitable specialist training for the function and for the products.<br>● Has attended the training courses for commissioning personnel. |
| Maintenance personnel | ● Carries out all maintenance work.<br>● Checks that the products are in perfect working order.<br>● Searches for and corrects malfunctions. | ● Has obtained suitable specialist training for the function and for the products. |

## Document identification

| Position | Information |
|---|---|
| Title page | ● Product type<br>● Product designation<br>● Document type |
| Footers | ● Document ID<br>– ID_ModificationIndex_Language_COUNTRY<br>● Edition date |
| Last page | ● Document ID<br>● Edition date<br>● Manual (product line)<br>● Register (table of contents for whole documentation, folder register) |

## Conventions for text marking

### Markups

Special markups are shown in this document as follows:

| | |
|---|---|
| ▷ | Requirement for a behavior instruction |
| ⇨ | Intermediate result of a behavior instruction |
| ⇨ | End result of a behavior instruction |
| 'Text' | Quotation, reproduced identically |
| <Key> | Identification of keys |

### Supplementary information and tips

The 'i' symbol identifies supplementary information and tips for an easier way of working, for example.

## Technical terms

| Term | Explanation |
|---|---|
| ABS | Acrylonitrile-butadiene-styrene (plastic) |
| ASA | Advanced Signal Analysis |
| C-LINE | Fire detector for standard applications |
| DA | Detection algorithms |
| FDnet/C-NET | Addressed detector line |
| LED | Light-emitting diode |
| PC | Polycarbonate (plastic) |
| S-LINE | Fire detector for sophisticated applications |

## Reference documents

| Document ID | Title |
|---|---|
| 000257 | LE3 test lamp, operating instructions |
| 001508 | Connection factors, line resistances and capacities for collective, AnalogPLUS, interactive, FDnet fire detection systems |
| 007984 | FDFB291 base for flame detector, installation |
| 008121 | FDF221-9, FDF241-9 flame detector, installation |
| 008331 | List of compatibility (for 'Sinteso' product line) |
| A6V10299652 | FDF221-9, FDF241-9 flame detector, commissioning |
| 009977 | Acceptance test fire (Guideline) |
| A6V10229261 | List of compatibility (for 'Cerberus PRO' product line) |
| A6V10299713 | FDF221-9, FDF241-9 flame detector, product insert |

## History of changes

The reference document's modification index applies to all languages into which the reference document is translated.

The first edition of a language version or a country variant may for example have the modification index "d" instead of "a" if the reference document already has this modification index.

The table below shows this document's history of changes:

| Modification index | Edition date | Brief description |
|---|---|---|
| j | 04.2010 | Reference documents adapted, history of changes redefined and standardized |
| i | 10.2009 | Editorial adjustments made |
| h | 09.2009 | Revision of content and layout |
| g | 09.2007 | Standard EN 54-17 and LPCB approval added; line separator parameters added; air humidity details changed |
| f | 08.2006 | Shielding in connection diagram supplemented; collective and FDnet performance checks revised; technical data revised |
| e | 05.2005 | 9.1 Technical data, system compatibility |
| d | 02.2005 | FDF241-9: Parameter sets 4 + 5 extended |
| c | 01.2005 | 9.2 Response time supplement |
| b | 12.2003 | Layout adjustment |
| a | 12.2003 | First edition |

The table below shows the published language versions with the corresponding modification index:

| Modification index | en_-- | de_-- | fr_-- | it_-- | es_-- |
|---|---|---|---|---|---|
| j | X | X | X | X | X |
| i | – | – | – | – | – |
| h | X | X | – | – | – |
| g | X | X | – | – | – |
| f | X | X | – | – | – |
| e | X | X | – | – | – |
| d | X | X | – | – | – |
| c | X | X | – | – | – |
| b | X | X | X | X | X |
| a | X | X | X | X | X |

X = published

– = no publication with this modification index

# 2 Safety

## 2.1 Safety notices

The safety notices must be observed in order to protect people and property.

The safety notices in this document contain the following elements:

- Symbol for danger
- Signal word
- Nature and origin of the danger
- Consequences if the danger occurs
- Measures or prohibitions for danger avoidance

### Symbol for danger

| | |
|---|---|
|  | This is the symbol for danger. It warns of **risks of injury**.<br>Follow all measures identified by this symbol to avoid injury or death. |

#### Additional danger symbols

These symbols indicate general dangers, the type of danger or possible consequences, measures and prohibitions, examples of which are shown in the following table:


General danger

Explosive atmosphere


Voltage/electric shock


Laser light


Battery


Heat

## Signal word

The signal word classifies the danger as defined in the following table:

| Signal word | Danger level |
|---|---|
| DANGER | DANGER identifies a dangerous situation, which **will result directly in death or serious injury** if you do not avoid this situation. |
| WARNING | WARNING identifies a dangerous situation, which **may result in death or serious injury** if you do not avoid this situation. |
| CAUTION | CAUTION identifies a dangerous situation, which **could result in slight to moderately serious injury** if you do not avoid this situation. |
| | |
| *NOTICE* | *NOTICE* identifies possible damage to property that may result from non-observance. |

## How risk of injury of presented

Information about the risk of injury is shown as follows:

| | |
|---|---|
| ⚠ | ⚠ WARNING |
| | **Nature and origin of the danger**<br>Consequences if the danger occurs<br>● Measures / prohibitions for danger avoidance |

## How possible damage to property is presented

Information about possible damage to property is shown as follows:

| | |
|---|---|
| ! | *NOTICE* |
| | **Nature and origin of the danger**<br>Consequences if the danger occurs<br>● Measures / prohibitions for danger avoidance |

## 2.2 Safety regulations for the method of operation

### National standards, regulations and legislation

Siemens products are developed and produced in compliance with the relevant European and international safety standards. Should additional national or local safety standards or legislation concerning the planning, assembly, installation, operation or disposal of the product apply at the place of operation, then these must also be taken into account together with the safety regulations in the product documentation.

### Electrical installations

| | |
|---|---|
|  | ⚠ WARNING<br>**Electrical voltage**<br>Electric shock<br>● Work on electrical installations may only be carried out by qualified electricians or by instructed persons working under the guidance and supervision of a qualified electrician, in accordance with the electrotechnical regulations. |

- Wherever possible disconnect products from the power supply when carrying out commissioning, maintenance or repair work on them.
- Lock volt-free areas to prevent them being switched back on again by mistake.
- Label the connection terminals with external external voltage using a 'DANGER External voltage' sign.
- Route mains connections to products separately and fuse them with their own, clearly marked fuse.
- Fit an easily accessible disconnecting device in accordance with IEC 60950-1 outside the installation.
- Produce earthing as stated in local safety regulations.

### Assembly, installation, commissioning and maintenance

- If you require tools such as a ladder, these must be safe and must be intended for the work in hand.
- When starting the fire control panel ensure that unstable conditions cannot arise.
- Ensure that all points listed in the 'Testing the product operability' section below are observed.
- You may only set controls to normal function when the product operability has been completely tested and the system has been handed over to the customer.

## Testing the product operability

- Prevent the remote transmission from triggering erroneously.
- If testing building installations or activating devices from third-party companies, you must collaborate with the people appointed.
- The activation of fire control installations for test purposes must not cause injury to anyone or damage to the building installations. The following instructions must be observed:
  - Use the correct potential for activation; this is generally the potential of the building installation.
  - Only check controls up to the interface (relay with blocking option).
  - Make sure that only the controls to be tested are activated.
- Inform people before testing the alarm devices and allow for possible panic responses.
- Inform people about any noise or mist which may be produced.
- Before testing the remote transmission, inform the corresponding alarm and fault signal receiving stations.

## Modifications to the system layout and products

Modifications to the system and to individual products may lead to faults, malfunctioning and safety risks. Written confirmation must be obtained from Siemens and the corresponding safety bodies for modifications or additions.

## Modules and spare parts

- Components and spare parts must comply with the technical specifications defined by Siemens. Only use products specified or recommended by Siemens.
- Only use fuses with the specified fuse characteristics.
- Wrong battery types and improper battery changing lead to a risk of explosion. Only use the same battery type or an equivalent battery type recommended by Siemens.
- Batteries must be disposed of in an environmentally friendly manner. Observe national guidelines and regulations.

## Disregard of the safety regulations

Before they are delivered, Siemens products are tested to ensure they function correctly when used properly. Siemens disclaims all liability for damage or injuries caused by the incorrect application of the instructions or the disregard of danger warnings contained in the documentation. This applies in particular to the following damage:

- Personal injuries or damage to property caused by improper use and incorrect application
- Personal injuries or damage to property caused by disregarding safety instructions in the documentation or on the product
- Personal injury or damage to property caused by poor maintenance or lack of maintenance

## Disclaimer

We have checked that the content of this document matches the hardware and software described. Despite this, we cannot rule out deviations and cannot therefore assume liability for them matching completely. The details in this document are checked regularly and any corrections needed included in subsequent editions.

We are grateful for any suggestions for improvement.

## 2.3 Standards and directives complied with

A list of the standards and directives complied with is available from your Siemens contact.

## 2.4 Release Notes

Limitations to the configuration or use of devices in a fire detection installation with a particular firmware version are possible.

| | |
|---|---|
| ⚠ | **WARNING** |
| | **Limited or non-existent fire detection**<br>Personal injury and damage to property in the event of a fire.<br>● Read the 'Release Notes' before you plan and/or configure a fire detection installation.<br>● Read the 'Release Notes' before you carry out a firmware update to a fire detection installation. |

| | |
|---|---|
| ! | *NOTICE* |
| | **Incorrect planning and/or configuration**<br>Important standards and specifications are not satisfied.<br>Fire detection installation is not accepted for commissioning.<br>Additional expense resulting from necessary new planning and/or configuration.<br>● Read the 'Release Notes' before you plan and/or configure a fire detection installation.<br>● Read the 'Release Notes' before you carry out a firmware update to a fire detection installation. |

# 3 Structure and function

## 3.1 Overview

The flame detector measures infrared radiation and can therefore detect organic material fires with and without smoke.

The table below shows what types of fire the flame detector can and cannot detect.

| Detection | No detection |
|---|---|
| Liquid fires without smoke | - |
| Gas fires without smoke | - |
| Open organic material fires with smoke, for example fires of:<br>● Wood<br>● Synthetic material<br>● Gas<br>● Oil-based products | Inorganic materials, such as:<br>● Hydrogen<br>● Phosphorus<br>● Sodium<br>● Magnesium<br>● Sulfur |

However if inorganic materials are burning in a fire with organic materials, e.g. packaging material, the flame detector can detect the fire.

The flame detector can be operated on both an FDnet/C-NET detector line and a collective detector line.

A mounting bracket and ball and socket joint are available to aid flame detector installation at a particular angle. A rain hood is available to protect against rain. More information can be found in the 'Accessories' chapter.

## Characteristics of flame detectors FDF221-9 and FDF241-9

The table below shows the characteristics and differences of flame detectors FDF221-9 and FDF241-9.

| Properties | FDF221-9 (C-LINE) | FDF241-9 (S-LINE) |
|---|---|---|
| Functions | ● Microprocessor-controlled signal processing<br>● Selective evaluation of flickering sequence | ● Microprocessor-controlled signal processing<br>● Selective evaluation of flickering sequence<br>● False alarm immunity<br>● Evaluation of different wave lengths<br>● Selftest |
| Sensory | One pyroelectric sensor | Two pyroelectric sensors and one silicon photo diode |
| Compatibility | FDnet/C-NET and collective detector lines (for details, see 'List of compatibility') | FDnet/C-NET and collective detector lines (for details, see 'List of compatibility') |
| Typical application | Indoor areas:<br>● Storage rooms<br>● As supplement to smoke detectors<br>● Areas free of deceptive phenomena | Indoor and outdoor areas:<br>● Industrial storage rooms<br>● Hangars<br>● Arc welding sites<br>● Power plants<br>● Print shops<br>● Atriums<br>● Wood storage<br>● Tunnels<br>● Transformer rooms<br>● Engine test beds |
| Limitations | ● No detection of UV radiation<br>● No detection of inorganic material fires<br>● Can only be used in areas without deceptive phenomena (e.g. solar radiation, halogen lamp, heat radiators) | ● No detection of UV radiation<br>● No detection of inorganic material fires |

### See also

S-LINE and C-LINE [→ 17]
Accessories [→ 29]

## 3.1.1 S-LINE and C-LINE

Regarding the detectors, there are two product lines: S-LINE and C-LINE. They differ regarding the different detector variants and functionalities in both the detectors and control panels. The application range of the S-LINE detectors is wider than that of the C-LINE detectors.

### Application range

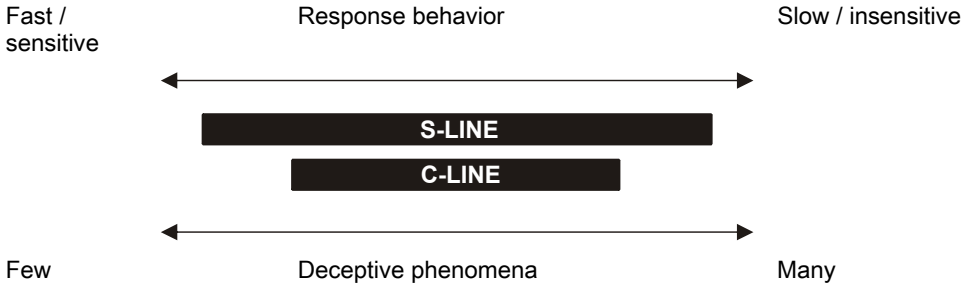


- S-LINE detectors are suited to applications where many deceptive phenomena are to be expected, or fast fire detection is required.
- C-LINE detectors are suited to applications where few deceptive phenomena are to be expected.

FDnet/C-NET devices of the S-LINE and C-LINE can be combined on the same detector line.

## 3.1.1.1 C-LINE

The C-LINE detectors are characterized by a very high detection reliability combined with a high immunity to deceptive phenomena. The detectors have different parameter sets, by means of which they can be adapted to the conditions prevailing at the installation location.

### Operating mode: Signal processing with detection algorithms

The following figure shows signal processing with C-LINE detectors in a diagram.

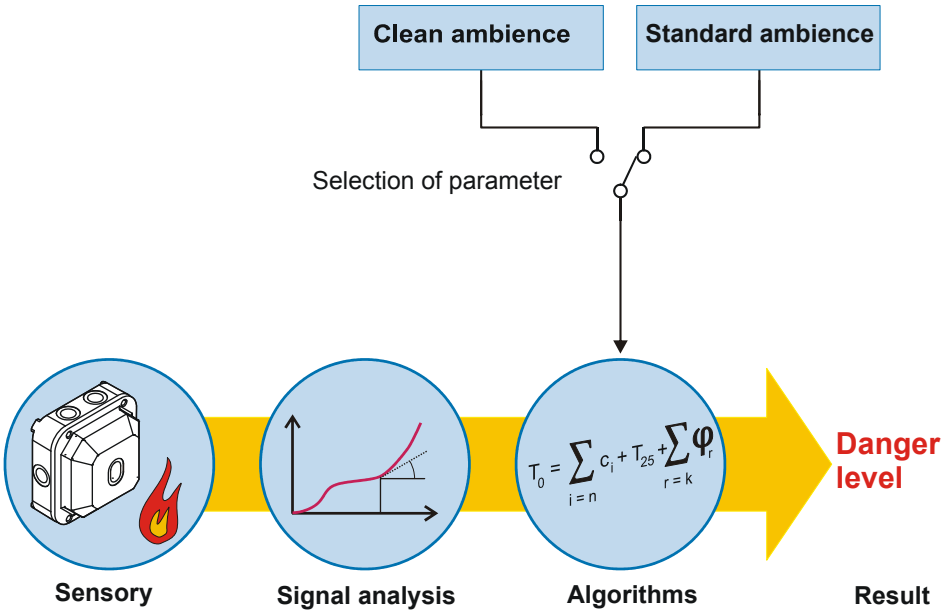


The signals captured by the sensory are transmitted to the algorithm. The algorithm analyses and evaluates the course of the signals (signal intensity, rate of rise and fluctuation). The algorithms are set by selecting the parameter set, which sets the detectors to the expected types of fire and ambient influences.

**See also**

Parameter sets for FDF221-9 [→ 42]

## 3.1.1.2 S-LINE

### Properties

In contrast to C-LINE detectors, S-LINE detectors have the following features:

- Dynamic influence on the parameter sets
- Pattern recognition
- Real time interpretation of the situation
- Process- and time-controlled switchover of the parameter sets

Signal processing of the S-LINE detectors is based on ASAtechnology (ASA = Advanced Signal Analysis). ASAtechnology can also be characterized as "second generation algorithms". Signal processing with ASAtechnology enables an optimum adaptation of the detector behavior to the environmental conditions.

S-LINE detectors are characterized by their unique detection reliability and high immunity to deceptive phenomena.

### Operating mode: Signal processing with ASAtechnology

The following figure shows signal processing with S-LINE detectors in the form of a diagram.

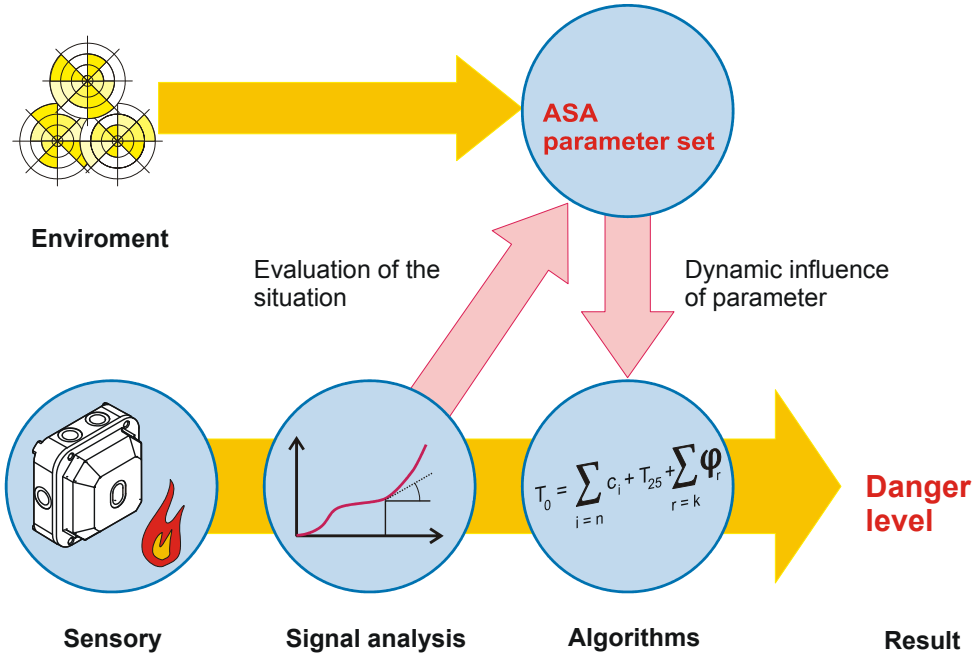


Sensory

The signals captured by the sensory are transmitted to the algorithm. The algorithms are set by selecting the parameter set.

Algorithms

In comparison to the detection algorithms (DA), the individual parameters of the selected parameter set can be adapted with ASAtechnology. A real time interpretation of the situation leads to a dynamic influence on the algorithm. This results in a broadening of the application range of the parameter set and thus of the detector. The detector reacts more sensitively in the event of fire, and more robustly in the event of deceptive phenomena.

Switching over the parameter set

In addition to the selection of the parameter set, the S-LINE detectors enable time- or process-controlled switching over of the parameter sets (Manned/Unmanned switchover). Thanks to this function, the detector can be used in places where the situation changes regularly and frequently (e.g. kitchens, production halls).

Downloadable parameter sets

Detectors of the S-LINE have several permanently programmed parameter sets. For special applications new, additional parameter sets can be downloaded in the field (depending on the control panel).

**See also**

Parameter sets for FDF241-9 [→ 43]

## 3.1.2 Details for ordering

| Type | Order no. | Designation |
|---|---|---|
| FDF221-9 | A5Q00003902 | Flame detector (C-LINE) |
| FDF241-9 | A5Q00003006 | Flame detector (S-LINE) |
| FDFB291 | A5Q00003310 | Base for flame detector |

## 3.2 Setup

The flame detector consists of the base for flame detector (1) and the flame detector itself (2).

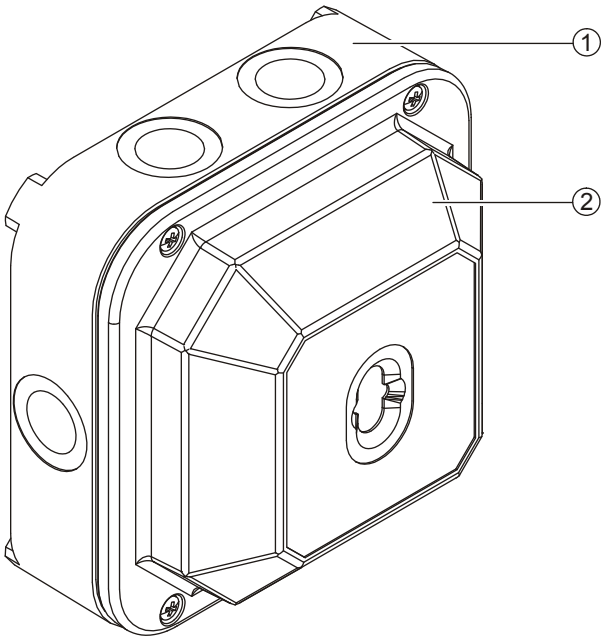


*Base for flame detector and flame detector*

1 Base for flame detector
2 Flame detector

The components of the flame detector are shown in the following sections.

## Base for flame detector

The base for flame detector is identical for the two flame detectors FDF221-9 and FDF241-9 and features the spring clips (2) for connecting to the detector line. The bridging connector (5) simulates the flame detector if not connected to the base. This prevents the detector line from being interrupted.

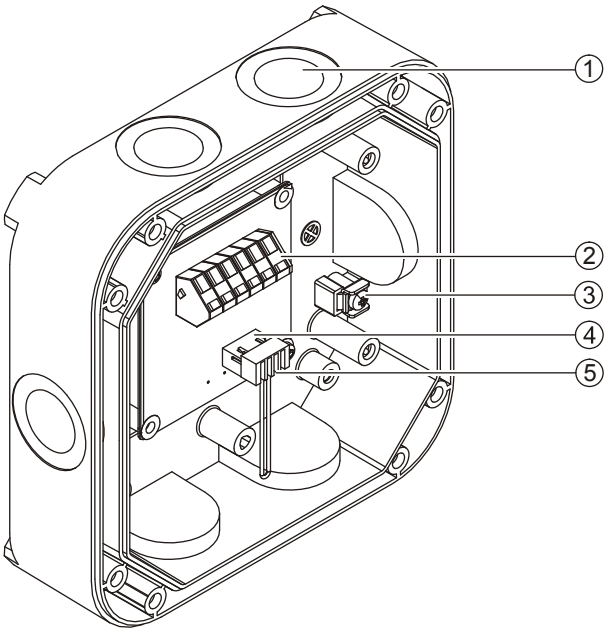


*Base for flame detector*

1 Six openings for cable entry
2 Spring clips
3 Auxiliary terminal
4 Connection for connection cable to flame detector
5 Bridging connector

## Flame detector

The flame detector accommodates the electronic components and sensory which differ for the two flame detectors FDF221-9 and FDF241-9. The two flame detectors can be distinguished externally by their sensors (see diagram). Flame detector FDF241-9 has three sensors (A, B, C), while flame detector FDF221-9 has just one (A). The alarm indicator (2) displays an alarm.

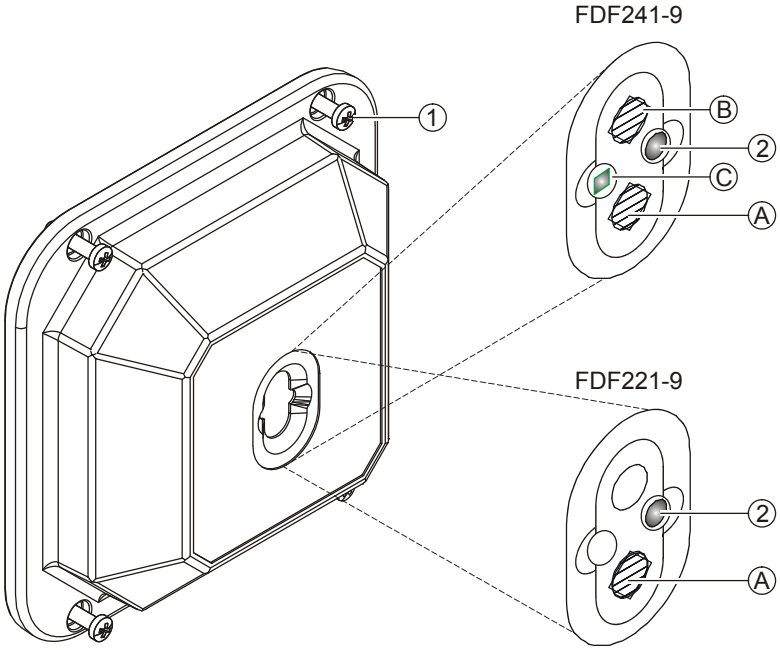


*Front of flame detector with enlarged view of sensors*

| | | | |
|---|---|---|---|
| 1 | Four screws for installation | A | Sensor A |
| 2 | Alarm indicator | B | Sensor B |
| | | C | Sensor C |

More information on the sensors can be found in the 'Function' chapter.

The connection for the connection cable (2) and the swiveling cover (3) which can be opened to set the parameter set are located on the rear of the flame detector.

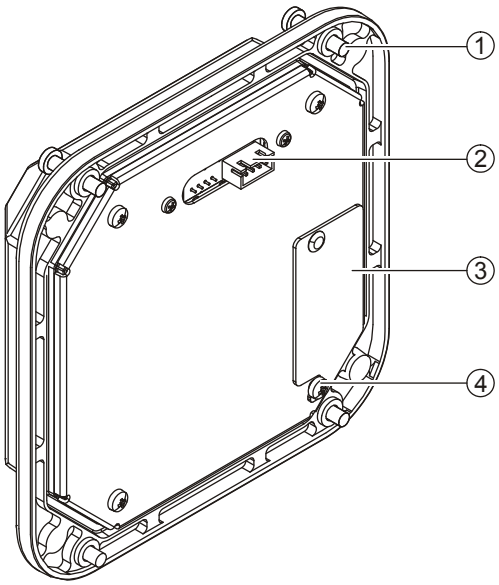


*Rear of flame detector*

1 Four screws for installation
2 Connection for connection cable to base for flame detector
3 Swiveling cover
4 Screw for fixing swiveling cover

## Connection cable

The electrical connection between the base for flame detector and flame detector is made using the pluggable connection cable.

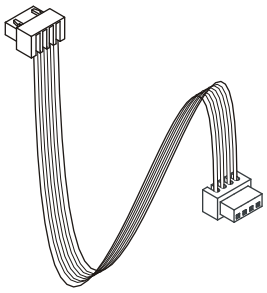

*Connection cable*

**See also**

Function [→ 25]

# 3.3 Function

The flame detector detects infrared radiation. The spectrum of organic material fires is very high near the A-channel (see diagram). Full use is made of this for detection as the flame detector measures and evaluates radiation in this spectral range. The description below explains how the sensory of the two flame detectors impacts on detection.

## Flame detector FDF221-9

Flame detector FDF221-9 has a pyroelectric sensor. This sensor measures the infrared radiation in the characteristic $CO_2$ spectral range between 4 and 4.8 µm (A-channel). As hot objects (3), such as hot motors, also have a high value in this area, they may activate a false alarm.

Only use flame detector FDF221-9 if there are no deceptive phenomena.

The following diagram shows the spectra of solar radiation, hot objects and organic material fires, in this example of an alcohol fire.

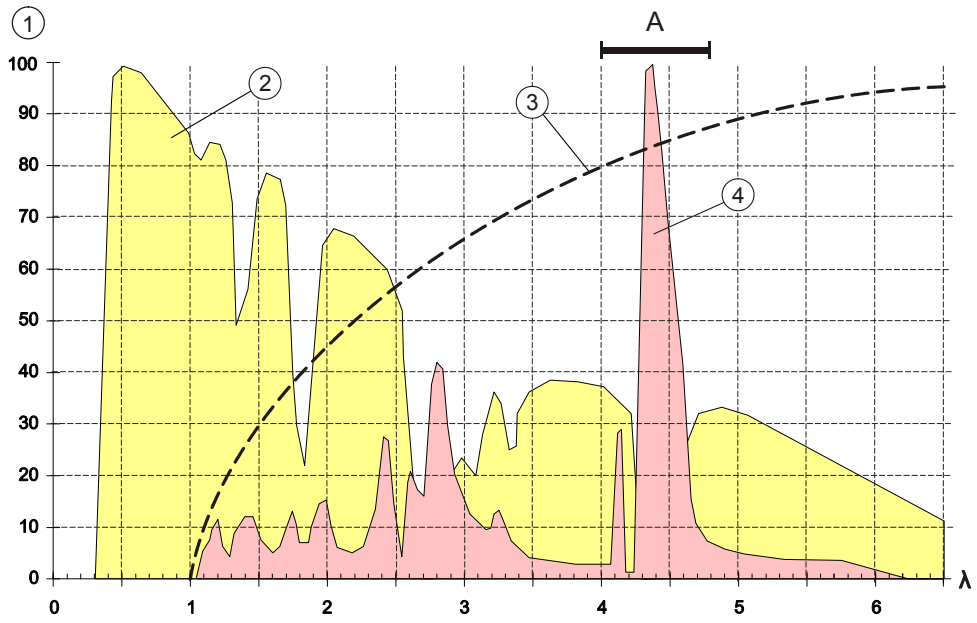


*Spectra of solar radiation, hot objects and organic material fires*

| | | | |
|---|---|---|---|
| 1 | Radiation intensity [%] | 4 | Organic material fire<br>In this case: Alcohol fire |
| 2 | Solar radiation | A | A-channel |
| 3 | Hot objects | λ | Wave length [µm] |

## Flame detector FDF241-9

Flame detector FDF241-9 has three sensors:

- Pyroelectric sensor A measures the infrared radiation in the characteristic $CO_2$ spectral range between 4 and 4.8 µm (A-channel).
- Pyroelectric sensor B measures the infrared radiation of deceptive phenomena, such as hot objects (3), in the range between 5.1 and 6 µm (B-channel).
- Sensor C is a silicon photo diode and measures solar radiation (2) in the range between 0.7 and 1.1 µm (C-channel).

The infrared radiation of the sun, hot objects and organic material fires has different spectra.

Thanks to these characteristics and the three sensors, flame detector FDF241-9 can use ASAtechnology to distinguish between deceptive phenomena and real fires. Flame detector FDF241-9 is suited to use in environments with deceptive phenomena, such as solar radiation or hot motors.

The following diagram shows the spectra of solar radiation, hot objects and organic material fires, in this example of an alcohol fire.

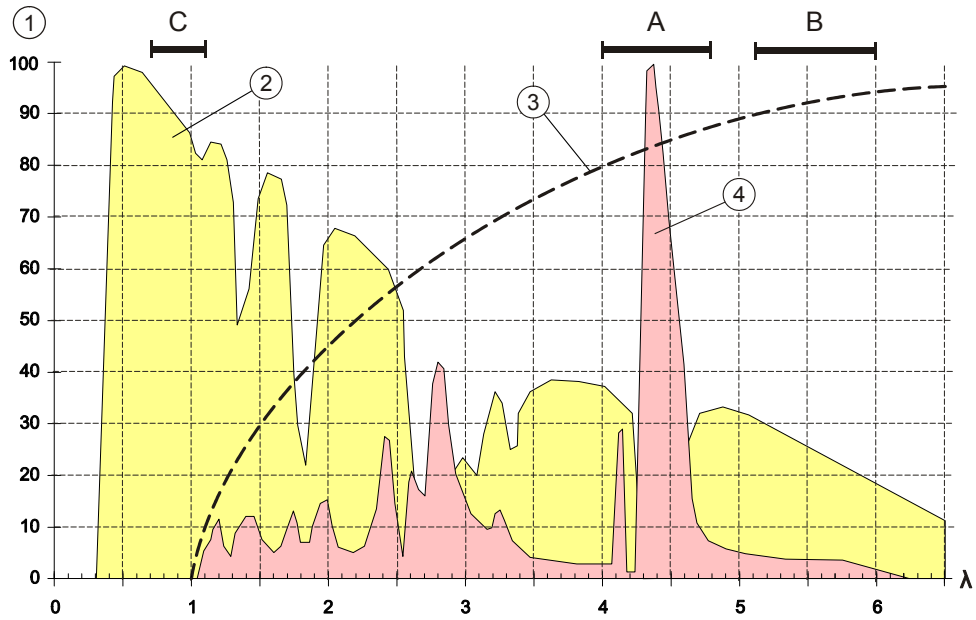


*Spectra of solar radiation, hot objects and organic material fires*

| | | | |
|---|---|---|---|
| 1 | Radiation intensity [%] | A | A-channel |
| 2 | Solar radiation | B | B-channel |
| 3 | Hot objects | C | C-channel |
| 4 | Organic materials fire<br>In this case: Alcohol fire | λ | Wave length [µm] |

## 3.3.1 Line separator

All FDnet/C-NET devices are equipped with a line separator.

The FDnet/C-NET device is equipped with electronic switches which isolate the defective part in case of a short-circuit on the detector line. The rest of the detector line remains serviceable. On a loop line all FDnet/C-NET devices remain fully functional after a simple error.

## 3.3.2 Selftest

Flame detector FDF241-9 regularly carries out a selftest. If a fault is detected, it transmits a message to the control panel.

Flame detector FDF221-9 does not carry out a selftest.

**See also**

Messages to the control panel [→ 28]

## 3.3.3 Messages to the control panel

The flame detector can transmit the following messages to the control panel:

### FDnet/C-NET operation

| Message | Meaning | Measures |
|---|---|---|
| Danger level '0' | Normal condition | - |
| Danger level '3' | The flame detector has detected a fire and transmits an alarm to the control panel. | - |
| 'Error' | The flame detector is defective. Fire detection is no longer ensured. | Replace the flame detector. |
| 'Incorrect parameter' | A parameter set which is not available has been set.<br>Fire detection is no longer ensured. | Select the correct parameter set. |

### Collective operation

| Message | Meaning | Measures |
|---|---|---|
| 'Alarm' danger level | The flame detector has detected a fire and transmits an alarm to the control panel. | - |
| 'Fault' | ● The parameters for the flame detector are set incorrectly.<br>OR<br>● The flame detector is defective.<br>Fire detection is no longer ensured. | ● Set the parameter set correctly.<br>OR<br>● Replace the flame detector. |

The text shown in the messages may differ due to country-specific adaptations and control panel versions.

**See also**

Determine parameter set [→ 41]
Set parameter set [→ 59]

# 3.4 Accessories

## 3.4.1 Mounting bracket MV1

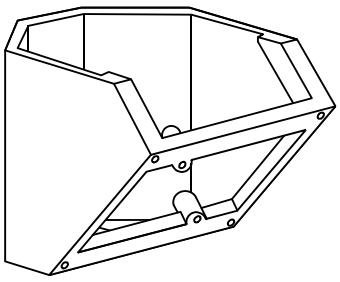

- For fixing flame detector at 45°
- Compatible with:
  - Flame detector FDF2x1-9
- Order no.: BPZ:3950450001

## 3.4.2 Ball and socket joint MWV1

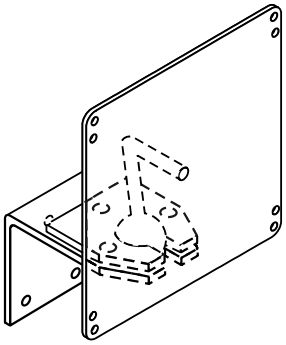

- For fixing flame detector at the angle and in the direction required
- For accurately aligning the flame detector to an area
- Compatible with:
  - Flame detector FDF2x1-9
- Order no.: BPZ:3674840001

## 3.4.3 Rain hood DFZ1190

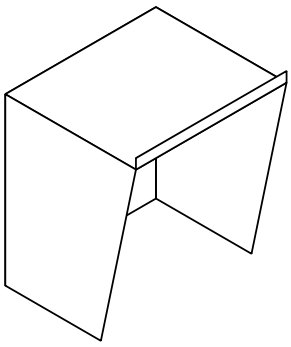

- For protecting the flame detector during outdoor applications
- Compatible with:
  - Flame detector FDF2x1-9
- Order no.: BPZ:5302660001

## 3.4.4 LE3 Test lamp

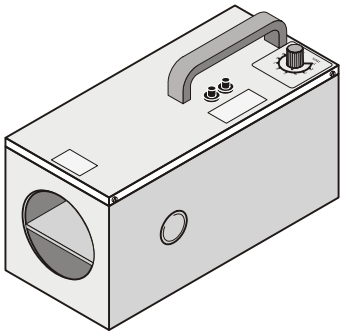

- For checking flame detectors
- Compatible with:
  - Flame detector FDF2x1-9
- For details, see document 000257
- Order no.: BPZ:3669510001

## 3.4.5 M20 x 1.5 metal cable gland

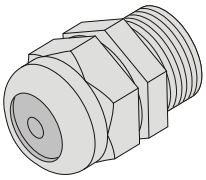

- For introducing a cable into a housing
- Compatible with:
  - M20 x 1.5 metal counter nut
- Order no.: A5Q00004478

## 3.4.6 Micro terminal DBZ1190-AA

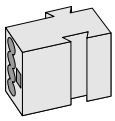

- Auxiliary terminal for connecting cables
- For T-branches of additional cabling for detector heating units, sounder base, external alarm indicators, etc.
- For wire diameters of 0.28 … 0.5 $mm^2$
- 4-pin
- Order no.: BPZ:4677080001

## 3.4.7 Connection terminal DBZ1190-AB

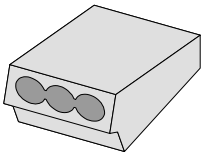

- Auxiliary terminal for connecting cables
- For T-branches of additional cabling for cable shielding, detector heating units, sounder base, external alarm indicators, etc.
- For wire diameters of 1 … 2.5 $mm^2$
- 3-pin
- Order no.: BPZ:4942340001

# 4 Planning

In this chapter you will learn how to arrange the flame detector for optimum room monitoring and how you determine the installation site and appropriate parameter set.

### Sequence

1. Select flame detector
2. Establish flame detector arrangement
3. Defining the place of installation
4. Mask deceptive phenomena
5. Determine parameter set

Information on the individual steps can be found in the following chapters.

## 4.1 Select flame detector

Select flame detector FDF221-9 if the following applies:

- There are no deceptive phenomena near the flame detector.
- The flame detector does not need to run a selftest.

Select flame detector FDF241-9 if one or more of the following applies:

- There are deceptive phenomena near the flame detector, such as.
  - Solar radiation
  - Hot objects
  - Arc welding
- The flame detector needs to run a selftest regularly.

## 4.2 Establish flame detector arrangement

Select the flame detector quantity, arrangement and alignment such that the area is equally monitored. The monitoring area of a flame detector is shaped like a rotationally symmetrical taper with an opening angle of 90°.

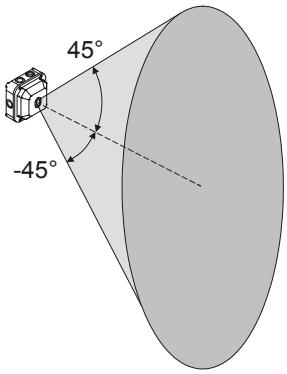


*Monitoring area of flame detector*

In a typical application, the flame detector is fitted at an angle of 45° to the wall in one of the ceiling corners.

When arranging the detectors, note the following:

- Line of sight to area which is to be monitored
- Arrangement of several flame detectors
- Deceptive phenomena

Information on these points can be found in the following chapters. This is followed by several examples of application.

## 4.2.1 Line of sight

In order for the flame detector to detect a fire, the fire's infrared radiation must reach the flame detector. The infrared radiation can reach the detector through direct or indirect irradiation.

Direct irradiation:

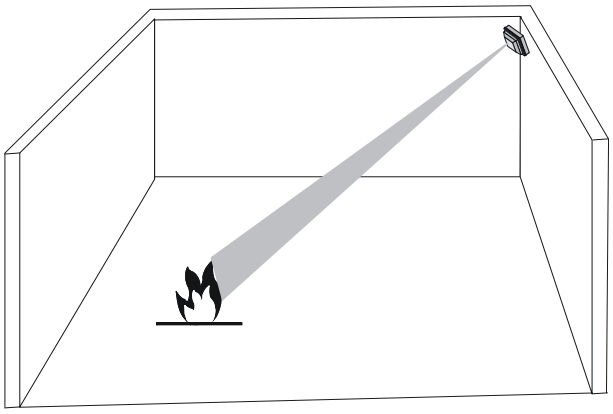

Indirect irradiation from reflections on walls, equipment etc.:

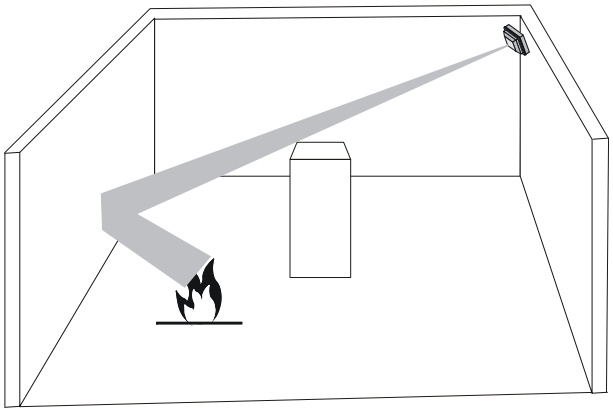

Direct irradiation is many times higher than indirect irradiation. The flame detector should therefore be positioned such that it has as direct a line of sight as possible to the entire monitoring area.

Glass and synthetic materials reduce infrared radiation so much that perfect detection is no longer possible. Avoid glass and synthetic materials between the flame detector and area being monitored.

**See also**

Defining the place of installation [→ 36]

## 4.2.2 Arrangement of several flame detectors

If several flame detectors are needed in a room, they must be arranged such that as high a level of monitoring redundancy as possible is present. In other words, some of the monitoring areas of the individual flame detectors should overlap. Install the detectors such that they are opposite one another.

If you are using four flame detectors in one room, fit one detector in each corner of the room.

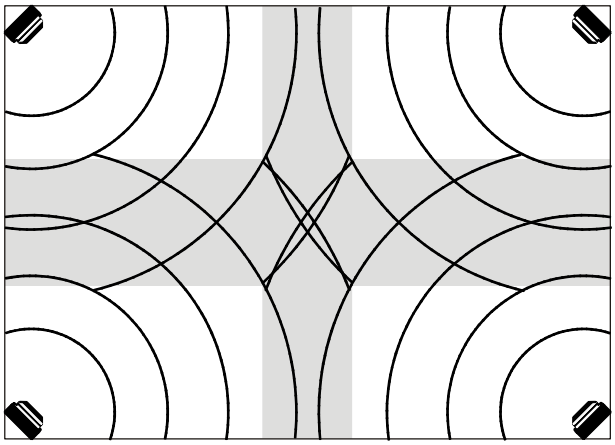

*Arrangement of four flame detectors*

If you are using two detectors in one room, install one detector in each of the opposite corners of the room.

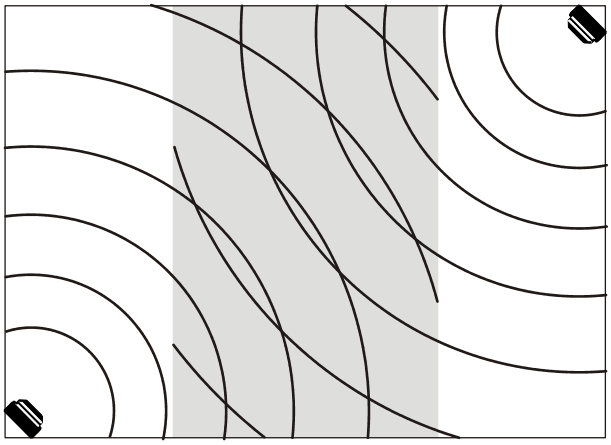

*Arrangement of two flame detectors*

**See also**

Defining the place of installation [→ 36]

## 4.2.3 Deceptive phenomena

When arranging the flame detector, take possible deceptive phenomena into account and take appropriate measures. Deceptive phenomena which may activate the flame detector and trigger a false alarm are listed below.

- Direct and indirect solar radiation
- Hot objects, such as hot motors
- Arc welding
- Moving parts between the flame detector and a hot object, such as air hoses from the exhaust system in the motor test bed
- Light from halogen lamps without protective glass

To prevent a false alarm, use an appropriate parameter set or use masks to hide the deceptive phenomenon.

**See also**

Mask deceptive phenomena [→ 40]
Determine parameter set [→ 41]

## 4.2.4 Examples of application

The flame detectors are installed in such a way that fires can be detected in spite of possible obstacles such as airfoils from aircraft or cranes.

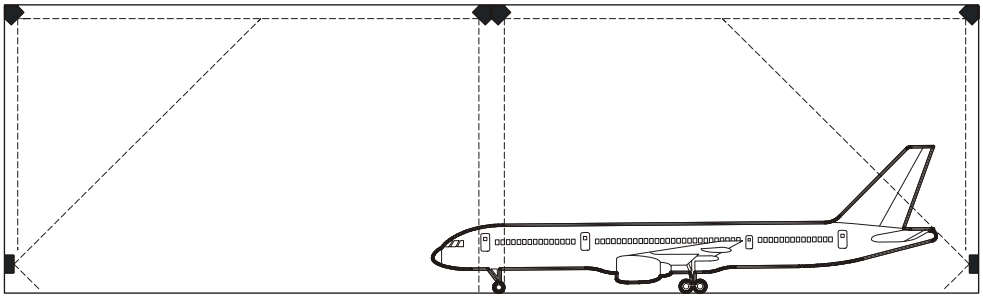

*Flame detector in an aircraft hangar*

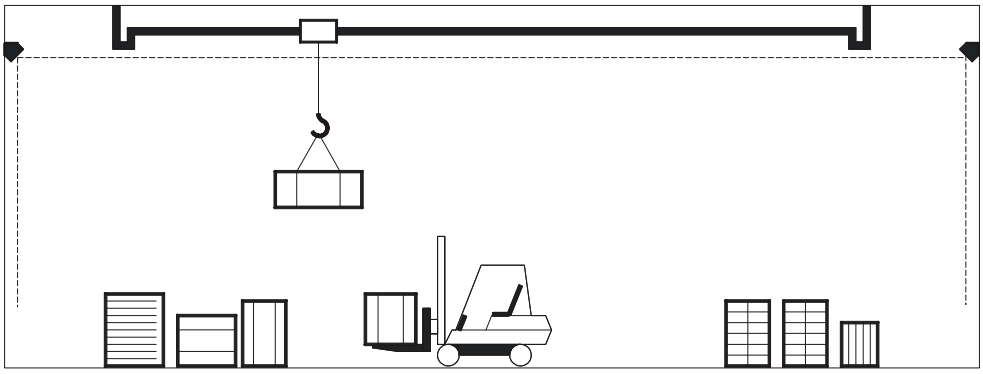

*Flame detector in a freight forwarding hall*

# 4.3 Defining the place of installation

To determine where to install the flame detector, you must first calculate the maximum detection distance d and then the maximum mounting height h. You can use these measurements to split the area requiring monitoring into one or more cubes. Each cube is monitored by one flame detector which is installed in one corner of the cube at 45°.

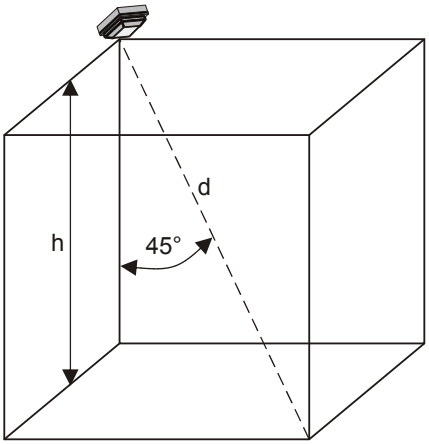


*Cube as planning basis for determining the site of installation*

Detection distance d corresponds to the cube's space diagonal and is the maximum distance between the flame detector and area being monitored.

Mounting height h corresponds to the cube's side length and is the flame detector's maximum mounting height.

The area is only split into cubes as a basis for planning. The cube does not correspond to the monitoring area. Also note the 'Establish flame detector arrangement' chapter.

Information on how to calculate detection distance d and mounting height h can be found in the following chapters.

**WARNING**

**Unforeseeable flame behavior due to air circulation**

Fire is not detected.

- Only use all the calculations provided below for areas with little air circulation.
- If you want to use the flame detector in areas with high levels of air circulation, please talk to your Siemens contact.

**See also**


- Calculate detection distance [→ 37]
- Calculate mounting height [→ 39]
- Establish flame detector arrangement [→ 32]

## 4.3.1 Calculate detection distance

The maximum detection distance of a flame detector depends on the following factors:

- Detector sensitivity
- Fire size
- Directional sensitivity
- Fuel

Various correction coefficients therefore need to be taken into account when calculating the maximum detection distance.

### Formula for calculating maximum detection distance d

$$d = S \times \sqrt{\frac{Gg}{Gb}} \times K \times F$$

| | | | |
|---|---|---|---|
| d | Detection distance | Gb | Basic fire size |
| S | Correction coefficient for detector sensitivity | K | Correction coefficient for directional sensitivity |
| Gg | Fire size wanted | F | Correction coefficient for fuel |

The correction coefficients for calculating the detection distance are described in the following sections.

The detection distance is reduced by up to 15 % by films of oil or water on the flame detector's protective glass.

### Correction coefficient S for detector sensitivity

The table below shows the correction coefficients for detector sensitivity. Only select 'High' detector sensitivity if there are no deceptive phenomena.

| Detector sensitivity | Correction coefficient S |
|---|---|
| Normal | 23 |
| High | 46 |

### Fire size wanted Gg

The fire size wanted Gg is the minimum size of the fire that is to be detected. The smaller the fire, the shorter the detection distance. Choose the basic area of the fire in $m^2$ for Gg.

## Basic fire size Gb

The basic fire size Gb is constant and is 0.25 $m^2$.

## Correction coefficient K for directional sensitivity

The detection distance depends on the flame detector's vision angle. The following diagram shows the correction coefficients for various vision angles.

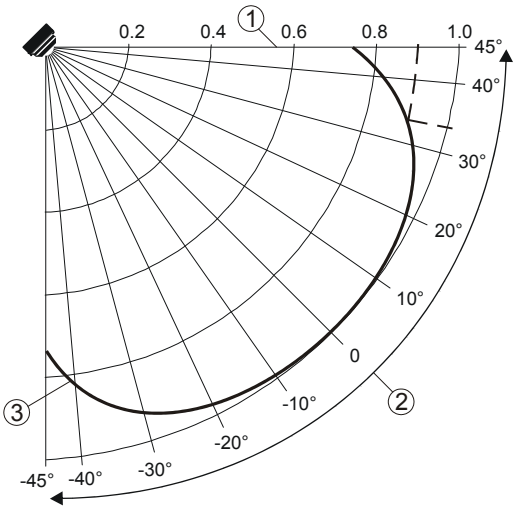


*Correction coefficients for directional sensitivity*

1 Correction coefficient K
2 Vision angle
3 Directional sensitivity

Example: The correction coefficient for a vision angle of 34° is 0.9.

## Correction coefficient F for fuel

Fuel also affects the detector's detection distance. The table below shows the correction coefficients for various fuels.

| Fuel | Correction coefficient F |
|---|---|
| Acetone | 1.5 |
| Diesel, heating oil | 0.8 |
| Ethanol | 1.0 |
| Heptane | 1.5 |
| Kerosene | 1.0 |
| Methanol | 0.8 |
| Crude oil | 1.0 |

### Example of how to calculate the maximum detection distance

Calculate the maximum detection distance for a heptane fire, 0.1 $m^2$ in size. The flame detector has a 'Normal' detector sensitivity and a vision angle of 0°.

**Known:**

| | | |
|---|---|---|
| S | Correction coefficient for detector sensitivity | 23 |
| Gg | Fire size wanted | 0.1 $m^2$ |
| Gb | Basic fire size | 0.25 $m^2$ |
| K | Correction coefficient for directional sensitivity | 1 |
| F | Correction coefficient for fuel | 1.5 |

$$d = S \times \sqrt{\frac{Gg}{Gb}} \times K \times F = 23\ m \times \sqrt{\frac{0.1\ m^2}{0.25\ m^2}} \times 1 \times 1.5 = 21.82\ m$$

**The maximum detection distance is 21 m.**

## 4.3.2 Calculate mounting height

In order to calculate the maximum mounting height h, you need to know detection distance d.

### Formula for calculating maximum mounting height h

$$h = \frac{d}{\sqrt{3}}$$

h Mounting height

d Detection distance

### Example of how to calculate the maximum mounting height

Calculate the maximum mounting height given a detection distance of 21 m.

**Known:**

Detection distance d = 21 m

$$h = \frac{d}{\sqrt{3}} = \frac{21\ m}{\sqrt{3}} = 12.12\ m$$

**The maximum mounting height is 12 m.**

# 4.4 Mask deceptive phenomena

If the monitoring area has deceptive phenomena, you can use masks. There are two ways of using masks:

- Use masks to limit the vision angle of the flame detector such that the detector does not detect the deceptive phenomenon.

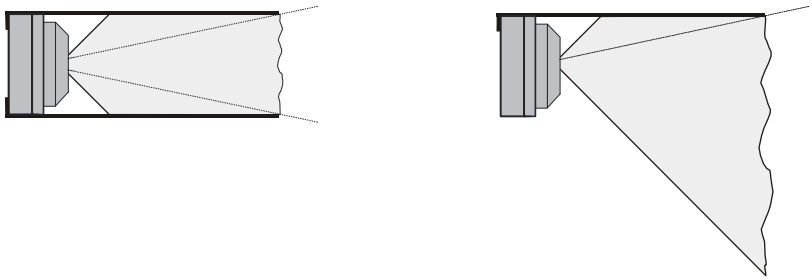

- Secure the masks around the deceptive phenomenon so that the detector does not detect the deceptive phenomenon.

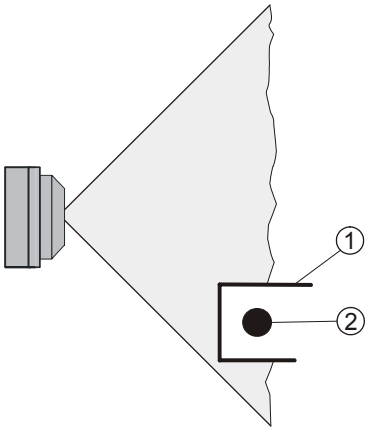


1 Mask

2 Deceptive phenomenon

The masks must be made from non-reflecting material which is impervious to infrared.

Example: Aluminum sheet 1 mm thick

# 4.5 Determine parameter set

A parameter set can be used to set the flame detector perfectly to the ambient features. The number of parameter sets available and the characteristics of the individual parameter sets are different for FDF221-9 and FDF241-9.

The individual parameter sets differ in terms of the following characteristics:

- Detector sensitivity
- Integration time
- Resistance to deceptive phenomena (FDF241-9 only)

## Detector sensitivity

The following detector sensitivities are available:

| | |
|---|---|
| High | Satisfies class 1 according to EN 54-10 |
| Normal | Satisfies class 2 according to EN 54-10 |

In accordance with EN 54-10, detectors are split into three classes depending on the distance from which they can detect standard fires.

| Class of detectors | Detector sensitivity | Detection distance |
|---|---|---|
| 1 | High | Up to 25 m |
| 2 | Normal | Up to 17 m |
| 3 | Normal | Up to 12 m |

*Sub-division into classes of detectors according to EN 54-10*

## Integration time

The integration time determines how long the detector analyzes the signal for before deciding whether an alarm should be activated. The following integration times are available:

- Very short: 1 second
- Short: 3 seconds
- Medium: 6 seconds
- Very long: 12 seconds

The integration time is not the same as the response time.

## Resistance to deceptive phenomena (FDF241-9 only)

Flame detector FDF241-9 has parameter sets which take account of the following deceptive phenomena:

- Direct solar radiation
- Hot objects
- Arc welding

## 4.5.1 Parameter sets for FDF221-9

The table below shows the parameter sets for flame detector FDF221-9:

| Parameter set | | Detector sensitivity | Integration |
|---|---|---|---|
| No. | Name | | |
| 01 | Robust | Normal (class 2) | Very long |
| 03 | Universal fast | Normal (class 2) | Short |
| 04 | Sensitive | High (class 1) | Medium |
| 05 | Sensitive fast | High (class 1) | Short |

*Parameter sets for flame detector FDF221-9*

### Typical applications for parameter sets

The parameter sets may only be used in rooms without deceptive phenomena, such as solar radiation and extreme sources of light and heat.

#### Robust (01)

This parameter set is suited to rooms with a low value concentration and low danger to life.

#### Universal fast (03)

This parameter set is suited to rooms with a high value concentration or high danger to life.

#### Sensitive (04)

This parameter set is suited to halls or large rooms with a low value concentration and low danger to life.

#### Sensitive fast (05)

This parameter set is suited to halls or large rooms with a high value concentration or high danger to life.

## 4.5.2 Parameter sets for FDF241-9

The table below shows the parameter sets for flame detector FDF241-9:

| Parameter set | | Sensitivity | Integration | Resistance to deceptive phenomena | | |
|---|---|---|---|---|---|---|
| No. | Name | | | Solar radiation | Hot objects | Arc welding |
| 01 | Robust | Normal (class 2) | Very long | X | X | X |
| 02 | Universal | Normal (class 2) | Medium | X | X | X |
| 03 | Universal fast | Normal (class 2) | Short | X | X | X |
| 04 | Sensitive | High (class 1) | Medium | - | X | - |
| 05 | Sensitive fast | High (class 1) | Short | - | - | - |
| 06 | Rapid | High (class 1) | Very short | - | - | - |
| 07 | Motor test bed | High (class 1) | Very long | X | - | - |
| 14 | Download 1 | Application-specific parameter set | | | | |
| 15 | Download 2 | Application-specific parameter set | | | | |

*Parameter sets for flame detector FDF241-9*

### Typical applications for parameter sets

#### Robust (01)

This parameter set is suited to halls where deceptive phenomena such as flying sparks, molten metals or strong solar radiation can be expected. Examples: Foundry, hardening shop, electric arc welding site, open ferry boat.

#### Universal (02)

This parameter set is suited to rooms where a normal fire growth can be expected. Examples: Battery room, machine room on ships, transformer station.

#### Universal fast (03)

This parameter set is suited to rooms where a rapid fire growth can be expected and there is a high danger to life. Example: Warehouse for chemicals.

#### Sensitive (04)

This parameter set is suited to large halls or outdoor applications where a normal fire growth can be expected. Examples: Industrial storage room, print shop, wood storage, atrium, recycling facility, ferry, cargo ship, tunnel.

#### Sensitive fast (05)

This parameter set is suited to halls and sites where a rapid fire growth can be expected and where even the smallest of flames will result in major damage. Examples: Fuel storage room, pumping station, petrochemical facility, aircraft hangar.

#### Rapid (06)

This parameter set is suited to protection of physical assets. Small flames possibly caused by processes must be detected immediately. The risk of false alarms is accepted. Example: Conveyor belt transporting combustible products from a furnace to the packaging area.

**Motor test bed (07)**

This parameter set is suited to motor test beds.

**Download 1 (14) and download 2 (15)**

These application-specific parameter sets can be downloaded locally and depend on the control panel used.

# 5 Mounting / Installation

This chapter explains how you install the base for flame detector and how you connect the flame detector to the detector line.

## Prerequisites

- The flame detector's installation site is determined following to the details provided in the 'Planning' chapter.
- The supply network is produced, connected and checked in line with the country-specific installation guidelines.

## Sequence

1. Switch flame detector over to collective operation
2. Fit base for flame detector
3. Electrical connection

Information on the individual steps can be found in the following chapters.

The flame detector is only fitted on the base for flame detector when commissioning.

**See also**

Planning [→ 31]

## 5.1 Switch flame detector over to collective operation

When supplied the flame detector is set for operation on an FDnet/C-NET detector line. When operating a collective detector line, the control panel normally automatically switches the flame detector to collective operation.

Some collective control panels do not however automatically switch from FDnet/C-NET operation to collective operation. In these cases, you must switch the flame detector over manually. If you are not certain whether the flame detector is switched over automatically, switch it manually to collective operation before fitting.

The detector always switches automatically from collective operation to FDnet/C-NET operation.

### Procedure

Note the positive and negative poles.

▷ The flame detector is not connected to the detector line.

1. Connect the base for the flame detector to a 12 … 28 V DC source of DC voltage, e.g. a battery, following the connection diagram shown below. Use a screwdriver to remove the load from the spring clip so you can slide in the wire.
2. Remove bridging connector (2) from base for flame detector.
3. Connect the connection cable supplied (1) to the connections (3) in the base for flame detector and on the flame detector.
4. Wait around 15 seconds and then remove the connection cable and source of DC voltage.

⇨ The flame detector is switched over to collective operation and can be connected to a collective detector line.

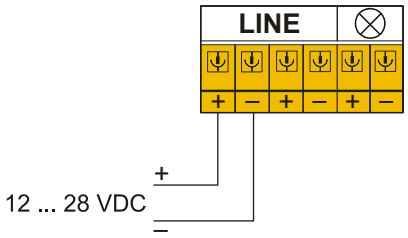


*Connection diagram for the source of DC voltage*

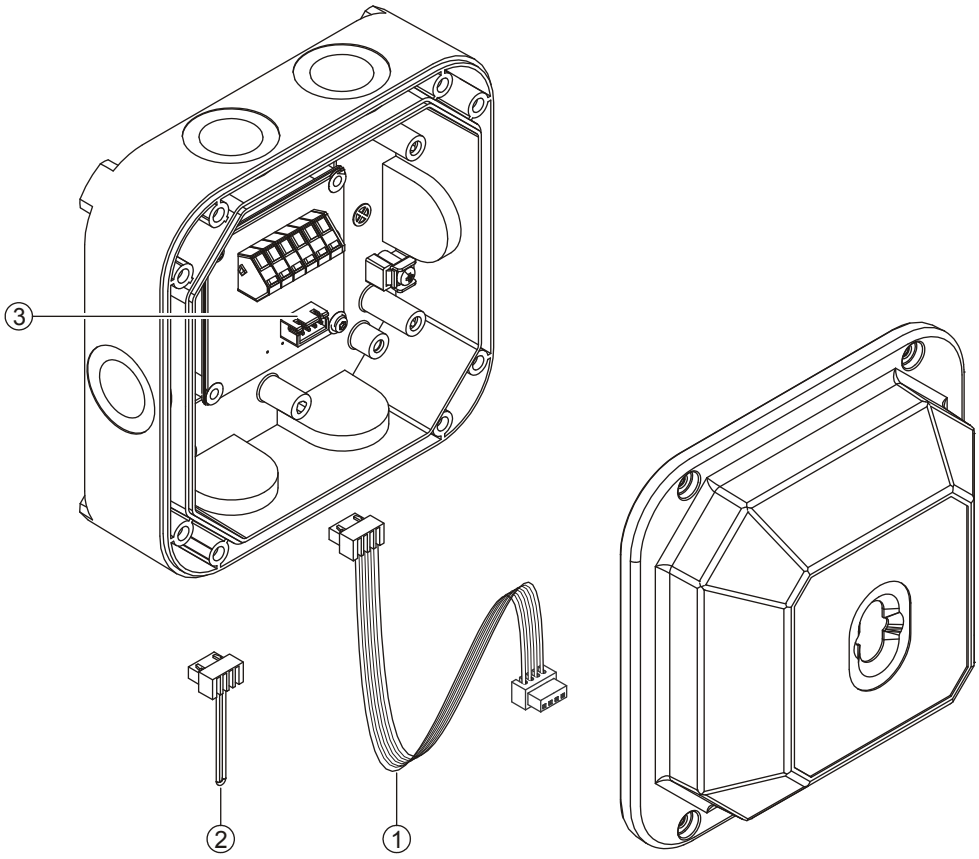


*Switching flame detector over to collective operation*

1 Connection cable
2 Bridging connector
3 Connection for connection cable

## 5.2 Fit base for flame detector

| | |
|---|---|
|  | ⚠ WARNING<br>**Danger of falling**<br>Bodily injury<br>● When installing, use a secured ladder or work platform. |

| | |
|---|---|
|  | ⚠ CAUTION<br>**Using the device in a damp and/or corrosive environment**<br>Device function is impaired.<br>● Use the M20 x 1.5 metal cable gland in damp and/or corrosive environments. |

1. If necessary, fit the mounting bracket, ball and socket joint or rain hood according to local conditions.
2. Break open the plastic parts in the base for flame detector at the openings you require for cable entry (1).
3. If necessary screw the M20 x 1.5 metal cable gland into the openings.
4. Use four screws (2) to fit the base for flame detector on the mounting bracket, ball and socket joint, rain hood or directly on a stable, vibration-free surface.

⇨ The base for flame detector is fitted.

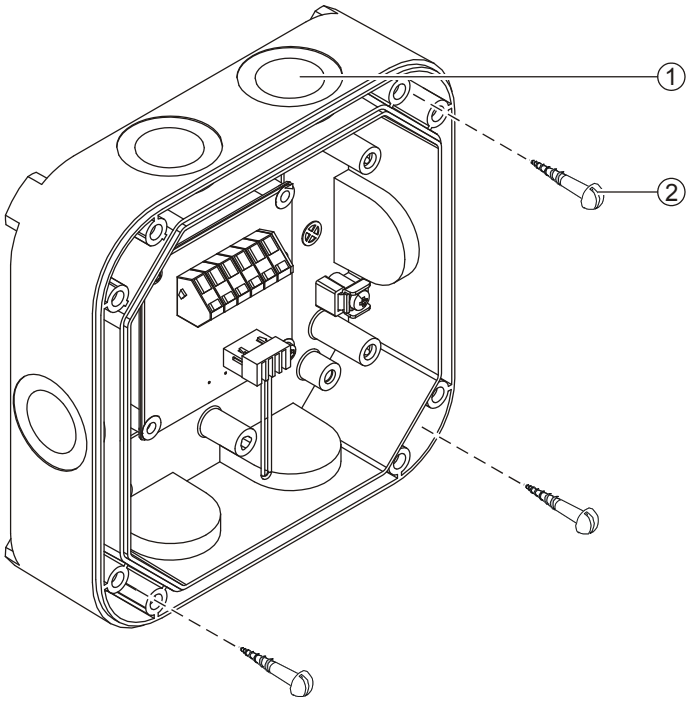


*Installation of base for flame detector*

1 Six openings for cable entry

2 Four screws for installing the base for flame detector

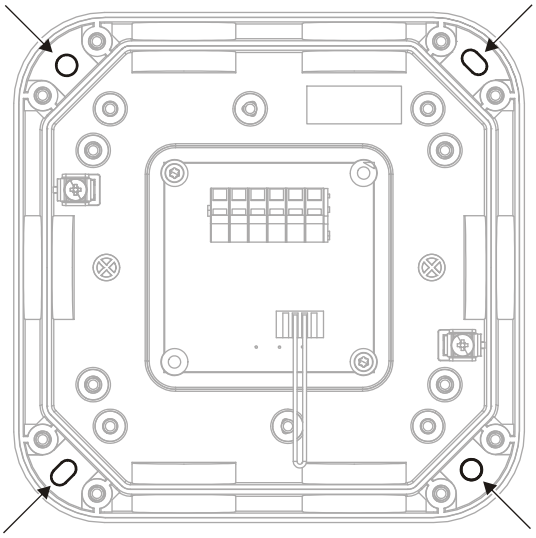

*Openings for installing base for flame detector*

# 5.3 Electrical connection

The electrical connection depends on the following factors:

- Connection to an FDnet/C-NET detector line or collective detector line
- Use of unshielded cables or shielded cables

The general process is described below. The connection diagrams and more information on the various connection variants can be found in the following chapters.

Note the following with regard to the electrical connection:

| | |
|---|---|
| ! | ⚠ CAUTION<br>**Using the device in a damp and/or corrosive environment**<br>Device function is impaired.<br>● Use the M20 x 1.5 metal cable gland in damp and/or corrosive environments. |

Note the positive and negative connections.

Only connect one wire per terminal. This is the only way of ensuring a problem-free connection over the device's entire service life.

- Wherever possible use twisted, unshielded cables. Shielded cables are only required in special cases, such as strong high-frequency fields. This also applies to connecting the external alarm indicators.
- Only use cables with a wire diameter of 0.2 … 1.5 $mm^2$.

## General procedure

▷ The base for flame detector is fitted.

▷ The plastic parts on the openings for cable entry are broken open.

1. Guide the cables from the detector line and external alarm indicator into the base for flame detector.
2. Connect the wires as shown in the corresponding connection diagram. Use a screwdriver to remove the load from the spring clip so you can slide in the wire.

**See also**

Connection to an addressed detector line [→ 51]
Connection to a collective detector line [→ 54]

## 5.3.1 Connection to an addressed detector line

The following applies to FDnet/C-NET detector lines:

- Loops, stubs and T-branches are possible.
- Note document 001508 for installation (calculation of the capacity layer).
- You may only connect external alarm indicators to **one** detector.
- Permissible cables for detectors with more than one external alarm indicator according to the collective connection diagram may be migrated to FDnet/C-NET without any changes.

### 5.3.1.1 Use of unshielded cables

The connection is established from base to base using twisted or untwisted wire pairs.

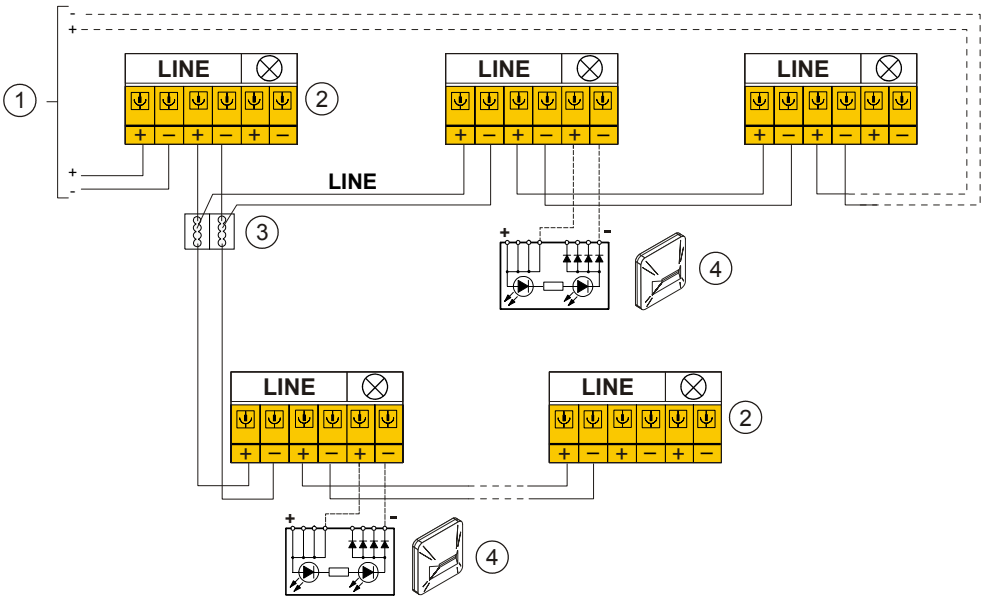


*Connection diagram for addressed detector line with and without external alarm indicators (without shielded cables)*

1 Control panel
2 Flame detector
3 Auxiliary terminals DBZ1190-xx
4 External alarm indicator

## 5.3.1.2 Use of shielded cables

The detector line shielding must be connected through in the detector base with auxiliary terminals DBZ1190-xx.

There are two ways of connecting external alarm indicators:

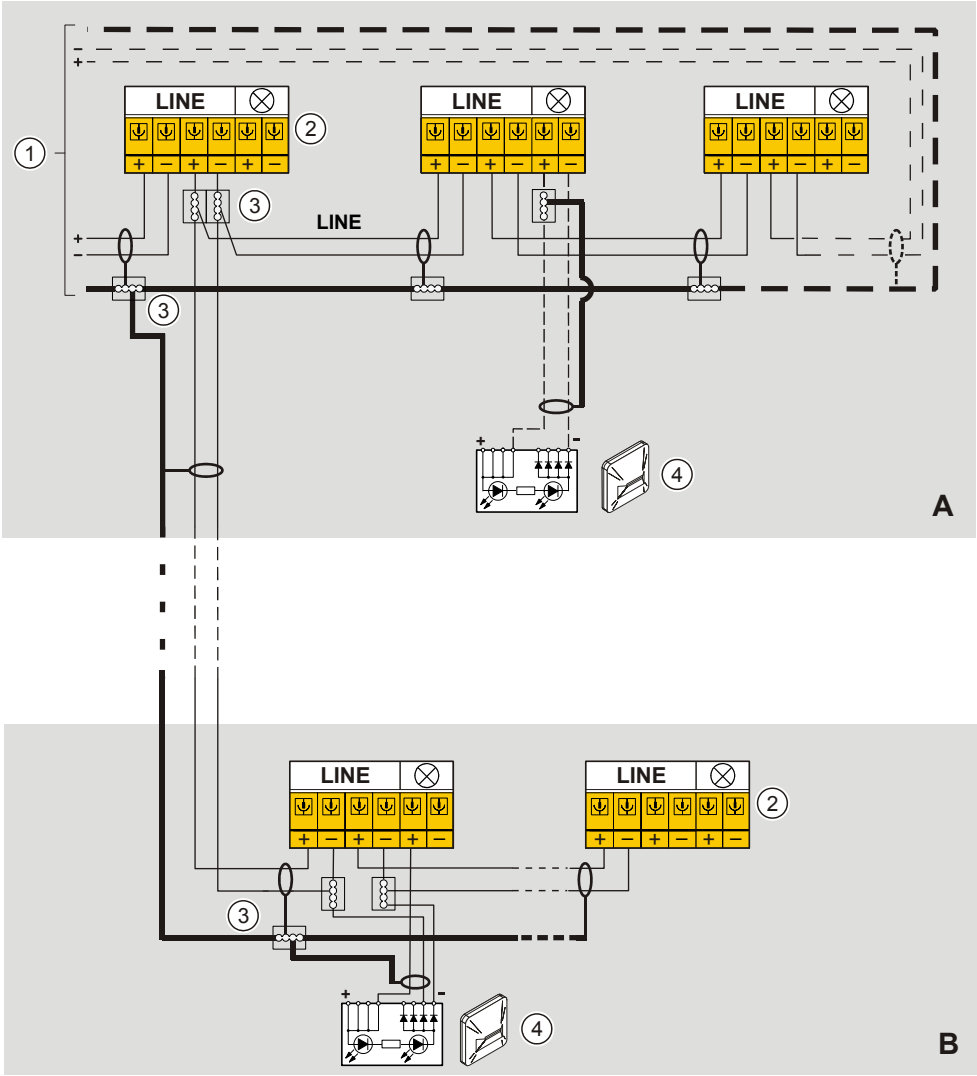


*Connection diagram for addressed detector line with and without external alarm indicators (with shielded cables)*

1 Control panel
2 Flame detector
3 Auxiliary terminals DBZ1190-xx
4 External alarm indicator

## Variant A

1. Connect the positive pole of the external alarm indicator to the positive pole for the external alarm indicator on the detector.
2. Connect the negative pole of the external alarm indicator to the negative pole for the external alarm indicator on the detector.
3. Connect the shielding of the connection cable between the external alarm indicator and detector on the detector side to the positive pole for the external alarm indicator via an auxiliary terminal DBZ1190-xx.

## Variant B

1. Connect the positive pole of the external alarm indicator to the positive pole for the external alarm indicator on the detector.
2. Leave the negative pole for the external alarm indicator on the detector unoccupied.
3. Connect each of the two negative poles of the external alarm indicator separately to both negative poles of the detector line.

The two negative connections of the external alarm indicator are decoupled externally in the alarm indicator by diodes.

4. Connect the shielding of the detector line with the shielding of the connection cable to the external alarm indicator with an auxiliary terminal DBZ1190-xx.

## 5.3.2 Connection to a collective detector line

Connect a control panel-specific end-of-line to the end of the collective detector line.

### 5.3.2.1 Use of unshielded cables

The connection is established from base to base using twisted or untwisted wire pairs.

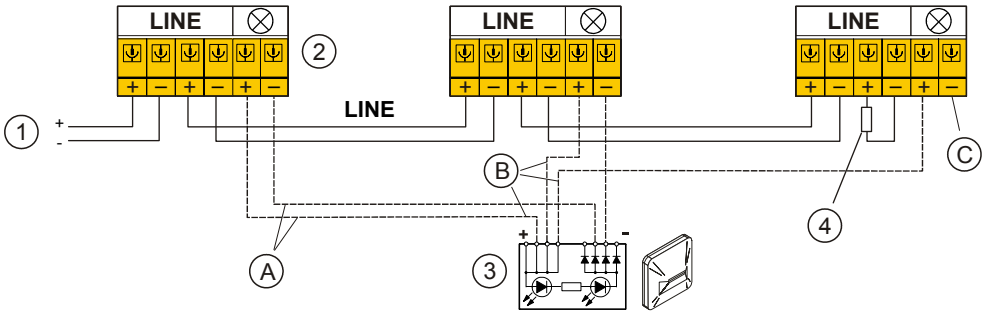


*Connection diagram for collective detector line with and without external alarm indicators (without shielded cables)*

1 Control panel
2 Flame detector
3 External alarm indicator
4 End-of-line depending on control panel

#### Standard circuitry

With standard circuitry, the external alarm indicator is connected to the positive and negative poles of each detector.

#### Wire-saving circuitry

Wire-saving circuitry in external alarm indicators is prohibited for new sites.

With wire-saving circuitry, the external alarm indicator is connected as follows:

- The external alarm indicator must be connected to the positive and negative poles of at least one detector (A).
- The external alarm indicator must be connected to the positive pole of every other detector (B).
- The external alarm indicator need not be connected to the negative pole of each other detector (C).

## 5.3.2.2 Use of shielded cables

The detector line shielding must be connected through in the detector base with auxiliary terminals DBZ1190-xx.

There are two ways of connecting external alarm indicators:

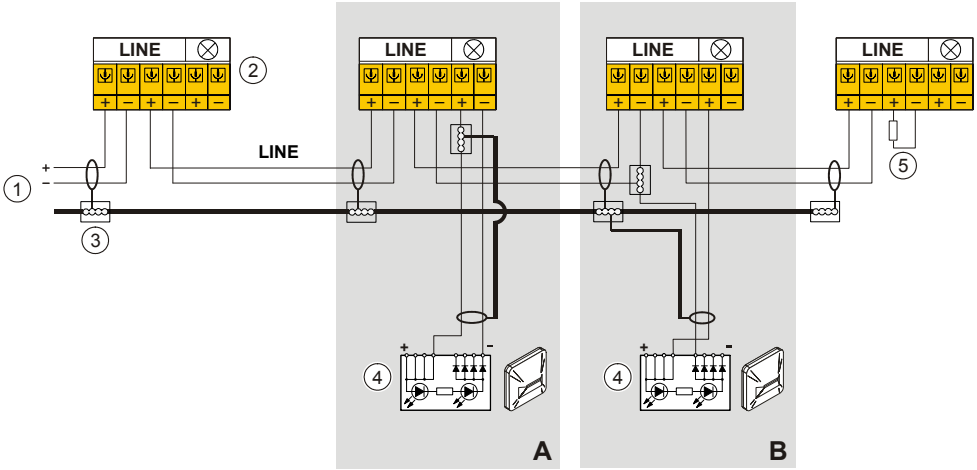


*Connection diagram for collective detector line with and without external alarm indicators (with shielded cables)*

1 Control panel
2 Flame detector
3 Auxiliary terminals DBZ1190-xx
4 External alarm indicator
5 End-of-line depending on control panel

### Variant A

1. Connect the positive pole of the external alarm indicator to the positive pole for the external alarm indicator on the detector.
2. Connect the negative pole of the external alarm indicator to the negative pole for the external alarm indicator on the detector.
3. Connect the shielding of the connection cable between the external alarm indicator and detector on the detector side to the positive pole for the external alarm indicator via an auxiliary terminal DBZ1190-xx.

### Variant B

1. Connect the positive pole of the external alarm indicator to the positive pole for the external alarm indicator on the detector.
2. Leave the negative pole for the external alarm indicator on the detector unoccupied.
3. Connect the negative pole of the external alarm indicator with the negative pole on the input side of the detector line on the detector via an auxiliary terminal DBZ1190-xx.
4. Connect the shielding of the detector line with the shielding of the connection cable to the external alarm indicator via an auxiliary terminal DBZ1190-xx.

# 6 Commissioning

This chapter explains how you set the parameter set and how you commission the flame detector on the detector line. The commissioning process depends on whether you are using an addressed detector line (FDnet/C-NET) or a collective detector line.

**See also**

Commissioning an addressed detector line [→ 56]
Commissioning a collective detector line [→ 59]

## 6.1 Commissioning an addressed detector line

### Sequence

1. Install flame detector on base for flame detector
2. Set parameter set
3. Run performance check

Information on the individual steps can be found in the following chapters.

### 6.1.1 Install flame detector on base for flame detector

| | |
|---|---|
|  | ⚠ WARNING<br>**Danger of falling**<br>Bodily injury<br>● When installing, use a secured ladder or work platform. |

| | |
|---|---|
|  | ⚠ WARNING<br>**Falling flame detector**<br>Bodily injury<br>● Never leave the flame detector hanging with the connection cable connected to the base for flame detector. |

1. Remove bridging connector (3) from base for flame detector.
2. Use the connection cable (2) to connect connections (4) in the base for flame detector and on the flame detector.
3. Use four screws (1) to secure the flame detector to the base for flame detector.

⇨ The flame detector is fitted.

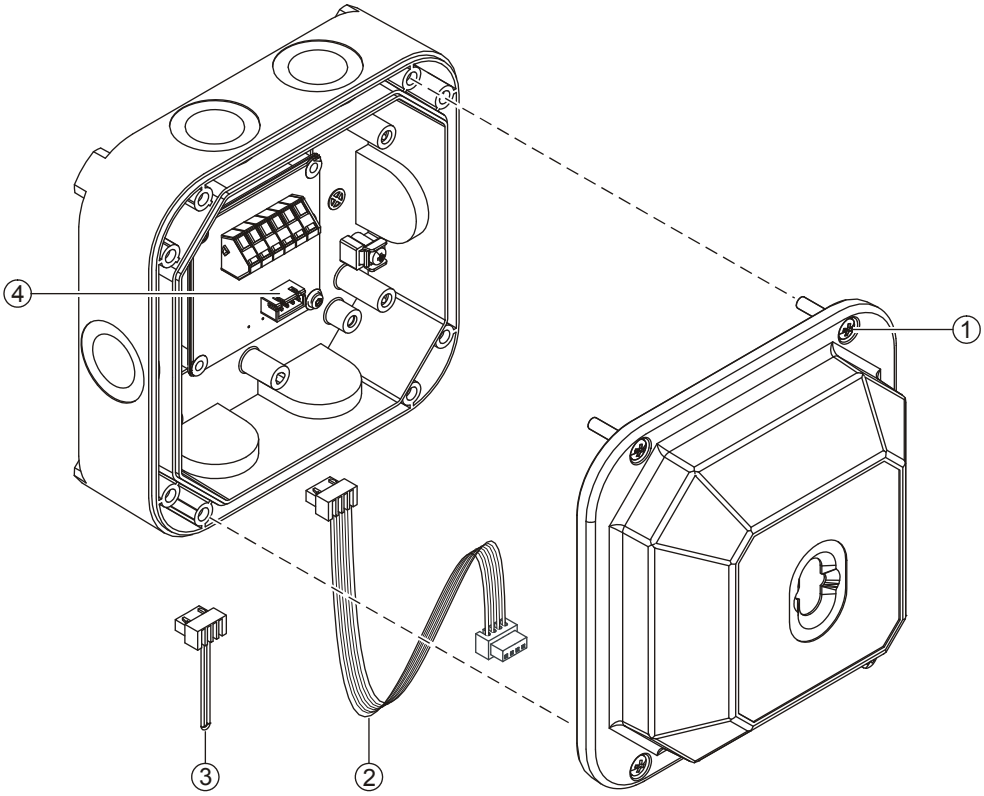


*Installation of flame detector on base for flame detector*

1 Four screws for installation
2 Connection cable
3 Bridging connector
4 Connection for connection cable

## 6.1.2 Set parameter set

Once the detector line has been read in, you need to set the parameter set. When in FDnet/C-NET operation, the DIP switches in the flame detector are not active. Use the control panel to set the parameter set you want. The table below shows the parameter sets and associated numbers.

| Parameter set | | |
|---|---|---|
| No. | FDF221-9 | FDF241-9 |
| 01 | Robust | Robust |
| 02 | - | Universal |
| 03 | Universal fast | Universal fast |
| 04 | Sensitive | Sensitive |
| 05 | Sensitive fast | Sensitive fast |
| 06 | - | Rapid |
| 07 | - | Motor test bed |
| 14 | - | Download 1 |
| 15 | - | Download 2 |

*Parameter sets for FDF221-9 and FDF241-9*

The procedure for setting the parameter set via the control panel is described in the control panel documentation.

**See also**

Determine parameter set [→ 41]

## 6.1.3 Run performance check

Use test lamp LE3 or a test fire to check the function of the flame detector.

The procedure control is described in the chapter 'Performance check'.

**See also**

Performance check [→ 62]

# 6.2 Commissioning a collective detector line

### Sequence

1. Set parameter set
2. Install flame detector on base for flame detector
3. Run performance check

Information on the individual steps can be found in the following chapters.

## 6.2.1 Set parameter set

For collective operation, the parameter set is set via the DIP switches in the flame detector.

### Procedure

▷ The parameter set is determined according to the details provided in the 'Planning' chapter.

**1.** Loosen screw (3) on rear of flame detector.

**2.** Open swiveling cover (1).

**3.** Use DIP switches (2) to set the parameter set you want (see table below).

**4.** Close swiveling cover (1) and fix with screw (3).

⇨ The parameter set is set.

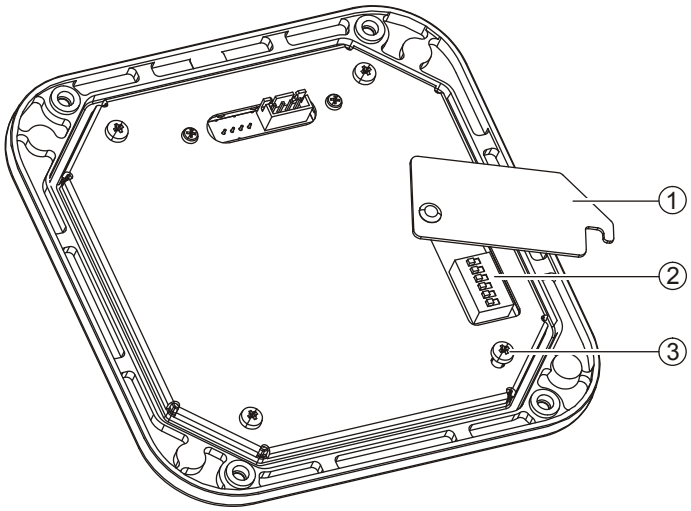


*Rear of flame detector with open swiveling cover*

1 Swiveling cover
2 DIP switch
3 Screw for fixing swiveling cover

| Parameter set | | | DIP switch | | | | | |
|---|---|---|---|---|---|---|---|---|
| No. | FDF221-9 | FDF241-9 | 1 | 2 | 3 | 4 | 5 | 6 |
| 01 | Robust | Robust | ON | OFF | OFF | OFF | OFF | OFF |
| 02 | - | Universal | OFF | ON | OFF | OFF | OFF | OFF |
| 03 | Universal fast | Universal fast | ON | ON | OFF | OFF | OFF | OFF |
| 04 | Sensitive | Sensitive | OFF | OFF | ON | OFF | OFF | OFF |
| 05 | Sensitive fast | Sensitive fast | ON | OFF | ON | OFF | OFF | OFF |
| 06 | - | Rapid | OFF | ON | ON | OFF | OFF | OFF |
| 07 | - | Motor test bed | ON | ON | ON | OFF | OFF | OFF |

*Set parameter set*

**See also**

Determine parameter set [→ 41]
Planning [→ 31]

## 6.2.2 Install flame detector on base for flame detector

**WARNING**

**Danger of falling**

Bodily injury

- When installing, use a secured ladder or work platform.

**WARNING**

**Falling flame detector**

Bodily injury

- Never leave the flame detector hanging with the connection cable connected to the base for flame detector.

1. Remove bridging connector (3) from base for flame detector.
2. Use the connection cable (2) to connect connections (4) in the base for flame detector and on the flame detector.
3. Use four screws (1) to secure the flame detector to the base for flame detector.

⇨ The flame detector is fitted.

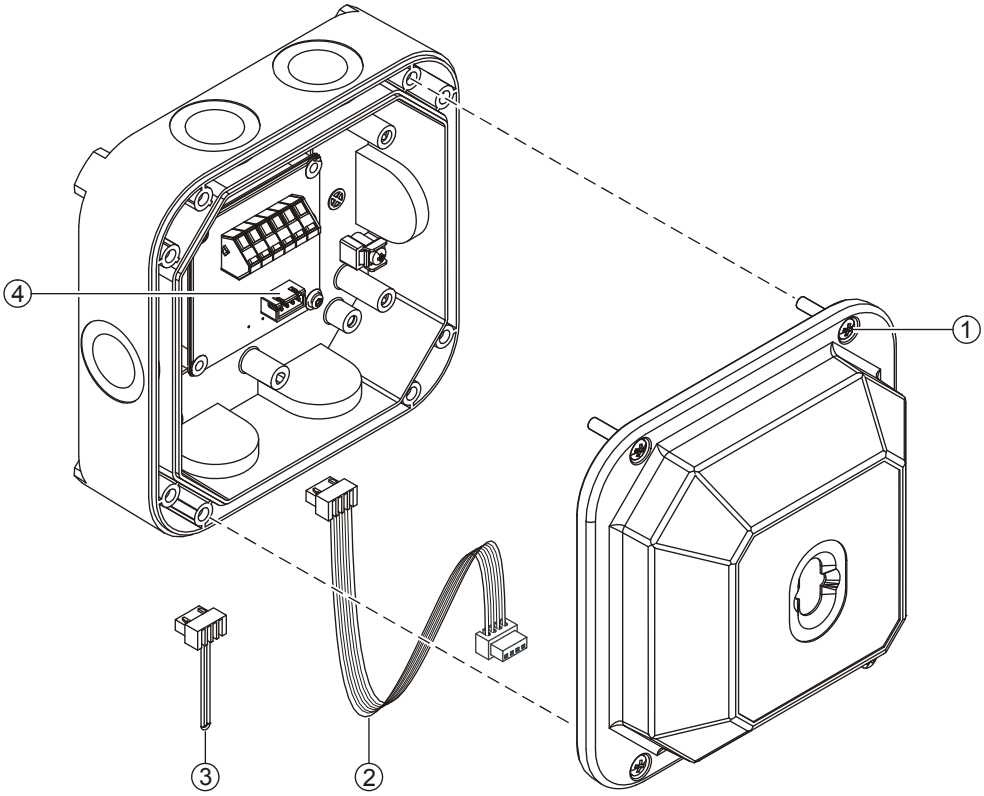


*Installation of flame detector on base for flame detector*

1 Four screws for installation
2 Connection cable
3 Bridging connector
4 Connection for connection cable

## 6.2.3 Run performance check

Use test lamp LE3 or a test fire to check the function of the flame detector.

The procedure control is described in the chapter 'Performance check'.

**See also**

Performance check [→ 62]

# 7 Maintenance / Repair

This chapter explains how to run a performance check, what you can do if the flame detector is not functioning correctly and how you can clean the flame detector.

## 7.1 Performance check

Use test lamp LE3 or a test fire to check the function of the flame detector on an annual basis.

### Performance check with test lamp LE3

1. On the control panel, switch off the remote transmission of alarms. To do this set the 'Detector test' operating mode on the control panel.
2. Use test lamp LE3 to check the flame detector. Note the information in document 000257. The maximum distance between test lamp and flame detector depends on the set parameter set (see table below).
   - ⇨ The flame detector activates an alarm within 20 seconds.
   - ⇨ The alarm indicator on the flame detector flashes.
3. On the control panel, switch the remote transmission of alarms back on.

⇨ The flame detector is ready.

More information can be found in the control panel documentation.

| FDF221-9 | | | FDF241-9 | | |
|---|---|---|---|---|---|
| No. | Parameter set | Distance | No. | Parameter set | Distance |
| 1 | Robust | 6 m | 1 | Robust | 6 m |
| 2 | - | - | 2 | Universal | 6 m |
| 3 | Universal fast | 6 m | 3 | Universal fast | 6 m |
| 4 | Sensitive | 13 m | 4 | Sensitive | 8 m |
| 5 | Sensitive fast | 13 m | 5 | Sensitive fast | 8 m |
| 6 | - | - | 6 | Rapid | 13 m |
| 7 | - | - | 7 | Motor test bed | 13 m |

*Maximum distance between test lamp and flame detector depends on parameter set*

If the flame detector does not activate an alarm, follow the actions described in the 'Troubleshooting' chapter.

### Performance check with a test fire

| | |
|---|---|
|  | ⚠ WARNING<br>**Fire hazard from test fire**<br>Bodily injury and material damage<br>● Only specially trained persons may undertake test fires. These persons must be trained in how to handle fire extinguishers.<br>● The size of the test fire depends on the room height. |

1. On the control panel, switch off the remote transmission of alarms. To do this set the 'Detector test' operating mode on the control panel.
2. Use a test fire to test the flame detector. Note the information in document 009977.
   ⇨ The flame detector activates an alarm within 20 seconds.
   ⇨ The alarm indicator on the flame detector flashes.
3. On the control panel, switch the remote transmission of alarms back on.

⇨ The flame detector is ready.

More information can be found in the control panel documentation.

If the flame detector does not activate an alarm, follow the actions described in the 'Troubleshooting' chapter.

**See also**

Repair [→ 64]

## 7.2 Cleaning

The flame detector sensors must be clearly visible through the protective glass. Proceed as follows if this is not the case:

1. Clean the protective glass from the outside with a soft, damp cloth. Washing-up liquid may be used if the glass is very dirty.
2. Carry out performance check.

**See also**

Performance check [→ 62]

# 7.3 Repair

## Problem

The flame detector does not activate an alarm during the performance check.

## Remedy

- Ensure that the flame detector is registered on the control panel.

If the problem persists:

- Ensure that the protective glass on the flame detector is clean and the sensors are clearly visible. Clean the protective glass if this is not the case.

If the problem persists:

- Replace the flame detector.

**See also**

Cleaning [→ 63]

# 8 Specifications

## 8.1 Technical data

| | | |
|---|---|---|
| **FDnet/C-NETdetector line** | Operating voltage | 12 … 33 V DC |
| | Operating current (quiescent) | 0.7 mA |
| | Maximum current connection factor | 3 |
| | Quiescent current connection factor | 3 |
| | Address connection factor | 1 |
| | Separator connection factor | 1 |
| | Protocol | FDnet/C-NET |
| | Compatibility | See 'List of compatibility |
| **Collective detector line** | Operating voltage | 14 … 28 V DC |
| | Operating current (quiescent) | 0.5 mA |
| | Making current | Max. 0.75 mA |
| | Connection factor | 5 |
| | Alarm voltage at alarm current: | |
| | ● 1 … 15 mA | 5 … 10 V DC |
| | ● 35 mA | 18 … 22 V DC |
| | ● 50 mA | 26 … 28 V DC |
| | Alarm current at operating voltage 5 … 28 V DC | 4 … 50 mA |
| | Reset voltage | 2 … 4 V DC |
| | Reset time at reset voltage ≤ 2 V DC | 1 … 2 s |
| | Protocol | Collective (with and without current limitation) |
| | Compatibility | See 'List of compatibility |
| **Line separator** | Line voltage: | |
| | ● Nominal | 32 V DC (= $V_{nom}$) |
| | ● Minimum | 12 V DC (= $V_{min}$) |
| | ● Maximum | 33 V DC (= $V_{max}$) |
| | Voltage at which the separator opens: | |
| | ● Minimum | 7.5 V DC (= $V_{SO\ min}$) |
| | ● Maximum | 10.5 V DC (= $V_{SO\ max}$) |
| | Permanent current when switches are closed: | Max. 0.5 A (= $I_{C\ max}$) |
| | Switching current (e.g. in the event of a short-circuit) | Max. 1 A (= $I_{S\ max}$) |
| | Leakage current when switches are open: | Max. 1 mA (= $I_{L\ max}$) |
| | Serial impedance when switches are closed: | Max. 0.5 Ω (= $Z_{C\ max}$) |

| | | |
|---|---|---|
| **External alarm indicators** | Number of external alarm indicators that can be connected | 2 |
| | Voltage | 6 … 17 V DC |
| | Power | 9 … 15 mA |
| | Length of line | ● Max. 30 m with unshielded cables (recommended) or if the shielding on the detector is connected to the positive pole for the external alarm indicator<br>● Max. 5 m, if the shielding is connected to earth |
| | Flashing interval times on FDnet/C-NET detector line: | |
| | ● Bright | 15 ms |
| | ● Dark | 1 s |
| | Flashing interval times on collective detector line | Control panel-specific |
| **Device characteristics** | Number of sensors: | |
| | ● FDF221-9 | 1 |
| | ● FDF241-9 | 3 |
| **Connections** | Detector line: | |
| | ● Design | Spring clips |
| | ● Cable cross section | 0.2 … 1.5 $mm^2$ |
| | External alarm indicators: | |
| | ● Design | Spring clips |
| | ● Cable cross section | 0.2 … 1.5 $mm^2$ |
| **Ambient conditions** | Operating temperature: | |
| | ● FDF221-9 | -25 … +70 °C |
| | ● FDF241-9 | -35 … +70 °C |
| | Storage temperature | -40 … +75 °C |
| | Air humidity | ≤95 % rel. |
| | Protection categories according to EN 60529/IEC 60529: | |
| | ● FDF221-9 | IP44 |
| | ● FDF241-9 | IP67 |
| | Electromagnetic compatibility: | |
| | ● 1 MHz … 1 GHz | 50 V/m |
| | ● 1 GHz … 2 GHz | 30 V/m |

| | | |
|---|---|---|
| **Mechanical data** | Dimensions (L x W x H) | 135 x 135 x 77 mm |
| | Weight: | |
| | ● Base for flame detector | 0.25 kg |
| | ● Flame detector | 0.5 kg |
| | Material: | |
| | ● Base for flame detector | ABS/PC-Blend |
| | ● Flame detector | Aluminum casting |
| | Colour | ~RAL 9010 pure white |
| **Standards** | Standards | EN 54-10, EN 54-17 |
| | VdS approvals: | |
| | ● FDF221-9 | G204009 |
| | ● FDF241-9 | G204010 |
| | LPCB approvals: | |
| | ● FDF221-9 | 126af/02 |
| | ● FDF241-9 | 126af/01 |
| | Certificates: | |
| | ● FDF221-9 | 0786-CPD-20371 |
| | ● FDF241-9 | 0786-CPD-20372 |
| | CE conformity mark | Yes |
| | QA Standards | Siemens Standard SN 36350<br>ISO 9001, ISO 9004 |

## 8.2 Dimensions

### Base for flame detector FDB291

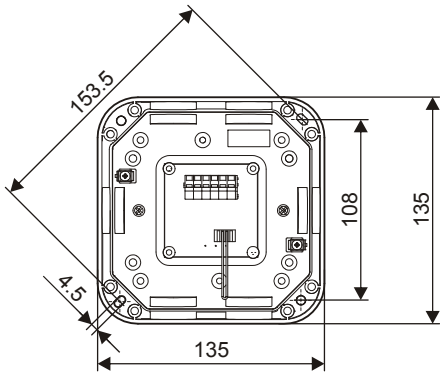


### Base for flame detector FDB291 with flame detector FDF221-9/FDF241-9

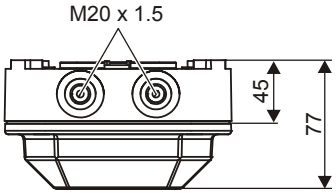


### Mounting bracket MV1

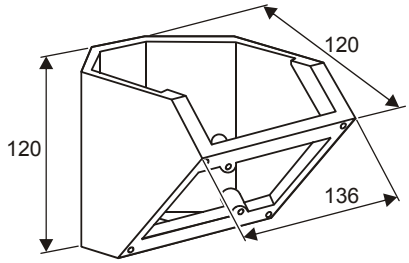


### Ball and socket joint MWV1

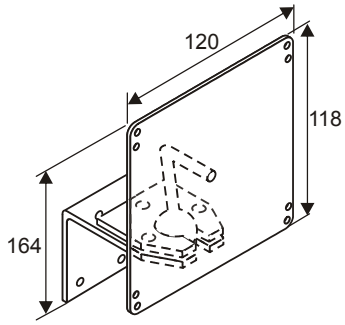


### Rain hood DFZ1190

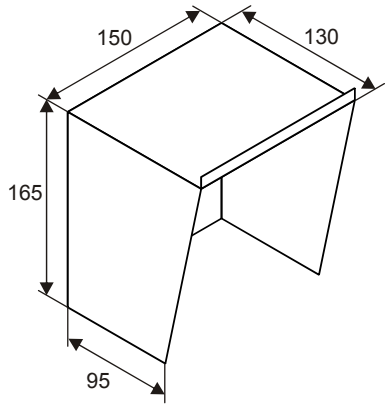


## 8.3 Environmental compatibility

- Reusable materials
- Electronic parts and synthetic materials can be easily separated
- Halogen-free synthetic materials, marked by embossed code
- The synthetic materials used do not generate any toxic substances during combustion.

The larger plastic parts are labeled according to ISO 11469. The basic polymer abbreviations comply with ISO 1043. The materials can be separated and recycled on this basis.

# 9 Index

Issued by
Siemens Switzerland Ltd
Industry Sector
Building Technologies Division
International Headquarters
Gubelstrasse 22
CH-6301 Zug
Tel. +41 41-724 24 24

www.siemens.com/buildingtechnologies